NOTES

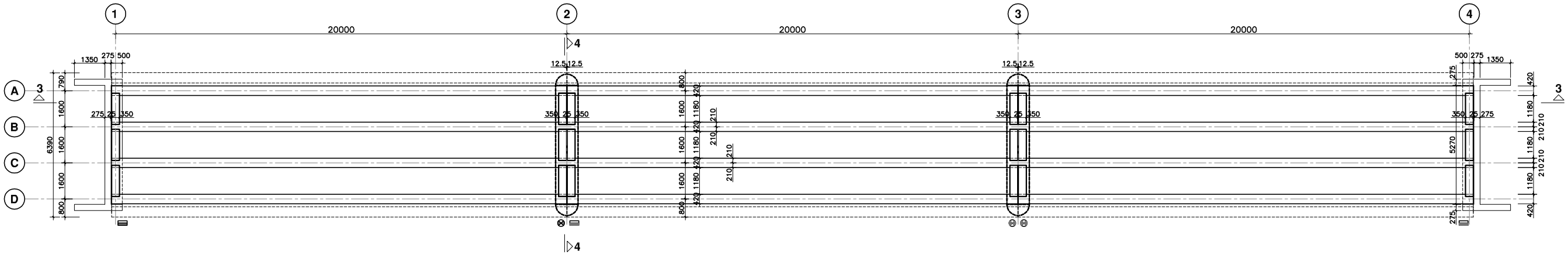

GIRDER LAYOUT

SCALE 1:100

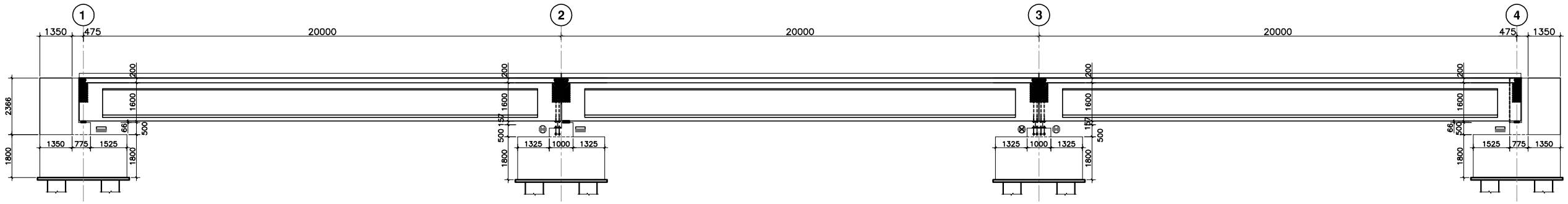

SECTION 3-3
LONGITUDINAL SECTION THROUGH BRIDGE

SCALE 1:100

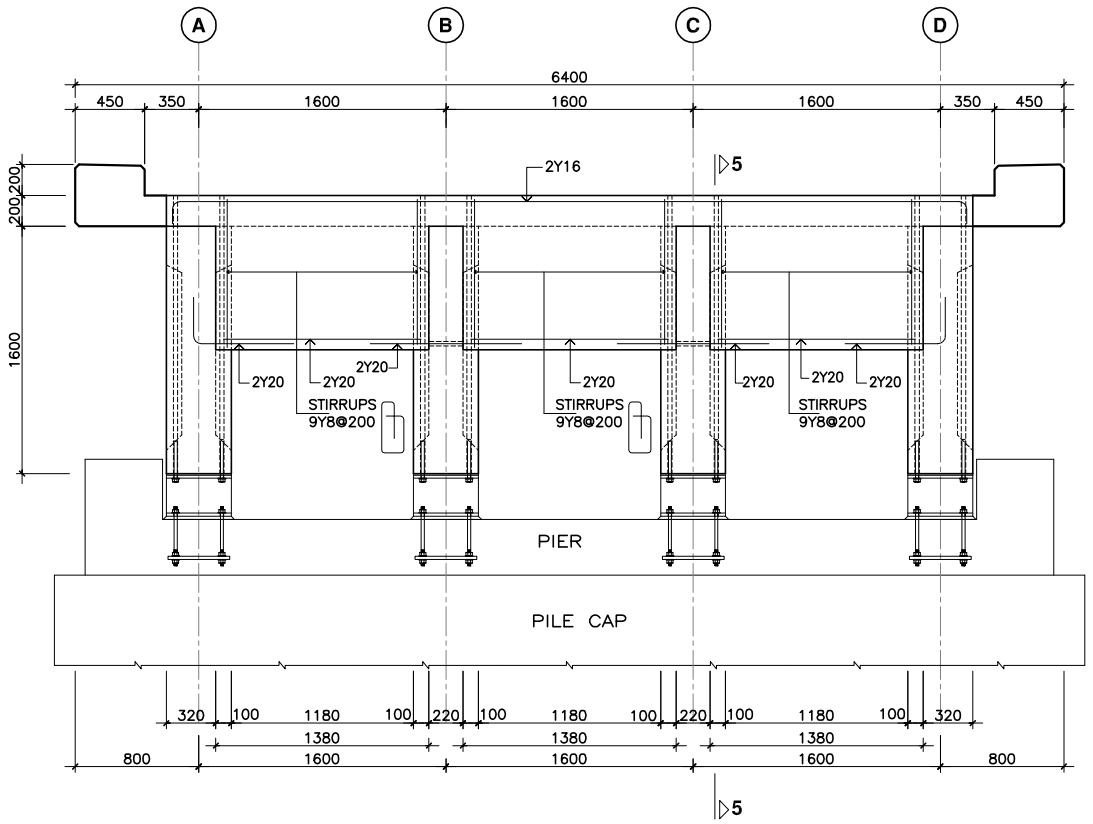

SECTION 4-4
CROSS SECTION THROUGH BRIDGE

SCALE 1:25

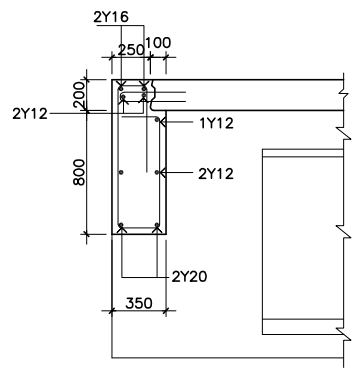

SECTION 5-5
CROSS SECTION THROUGH CAST IN SITU BEAM

SCALE 1:25