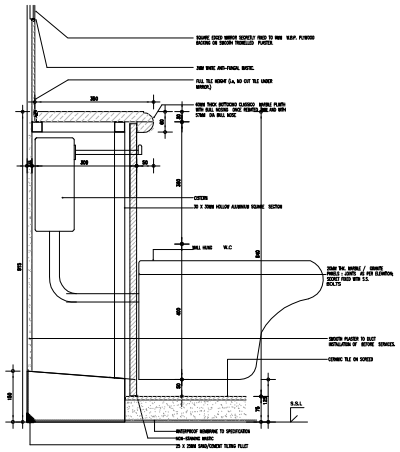

1 TYPICAL SECTION THROUGH BATHROOM DUCT AT WALL HUNG BIDET AND WALL HUNG W.C. CONDITION

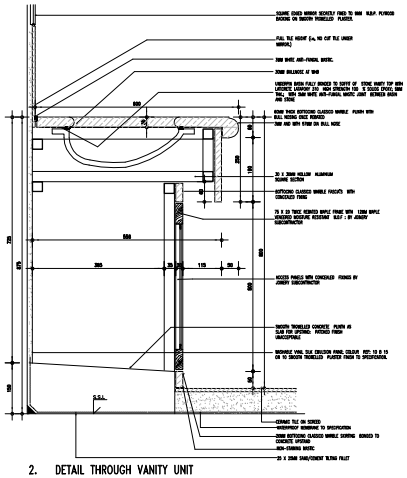

2. DETAIL THROUGH VANITY UNIT

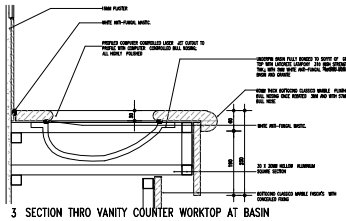

3 SECTION THRO VANITY COUNTER WORKTOP AT BASIN

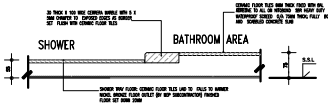

4 SHOWER TRAY FLOOR CONDITION

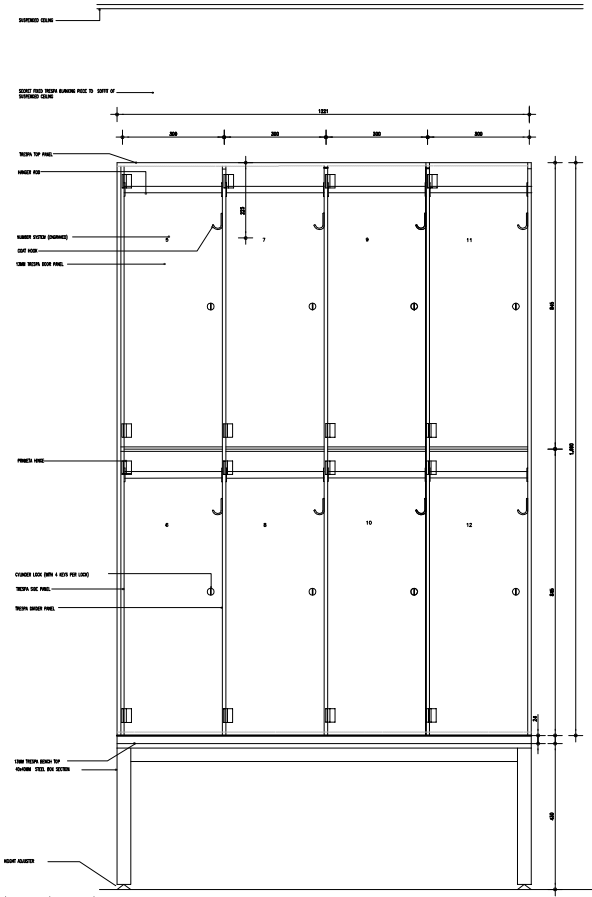

ELEVATION (DOUBLE TIER LOCKERS)
BANK OF 8No LOCKERS

SCALE 1:10

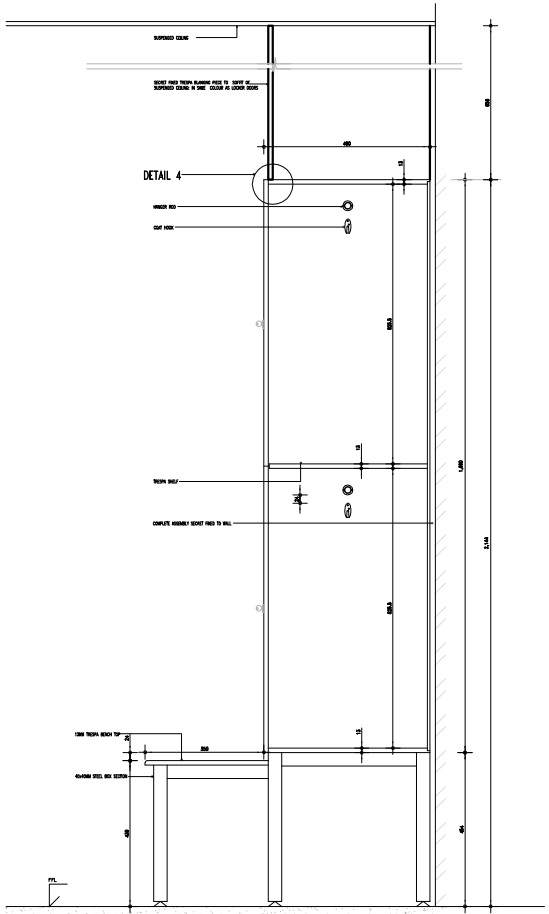

SECTION AT LOCKER

SCALE 1:10

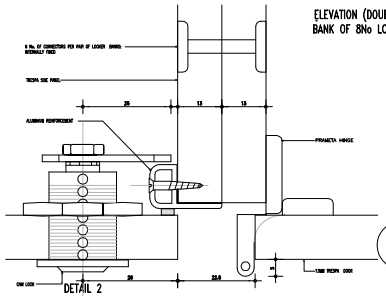

DETAIL 2
SCALE 1:1

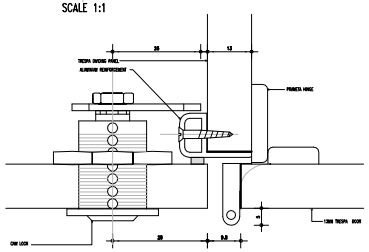

DETAIL 3
SCALE 1:1

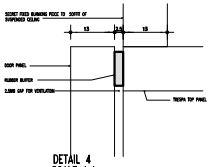

DETAIL 4
SCALE 1:1

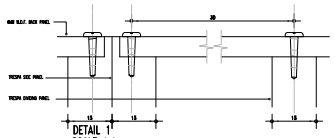

DETAIL 1
SCALE 1:1

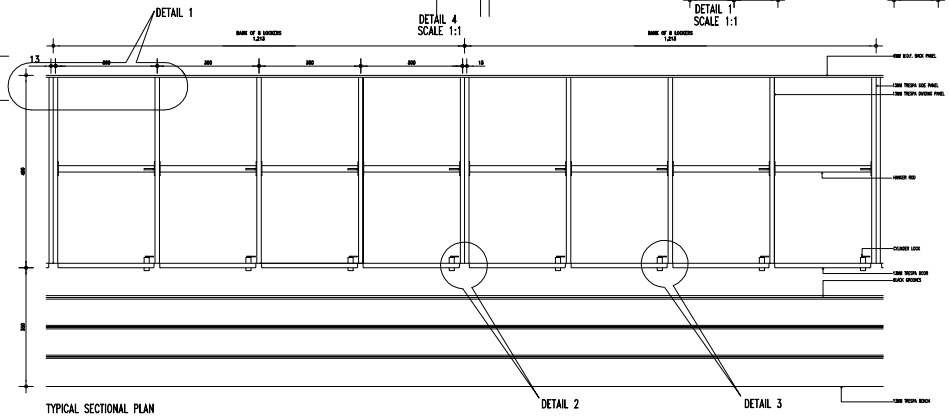

TYPICAL SECTIONAL PLAN